REV.	DESCRIPTION	BY	DATE
0	INITIAL CONTROL.	cmansfield	8/6/2018

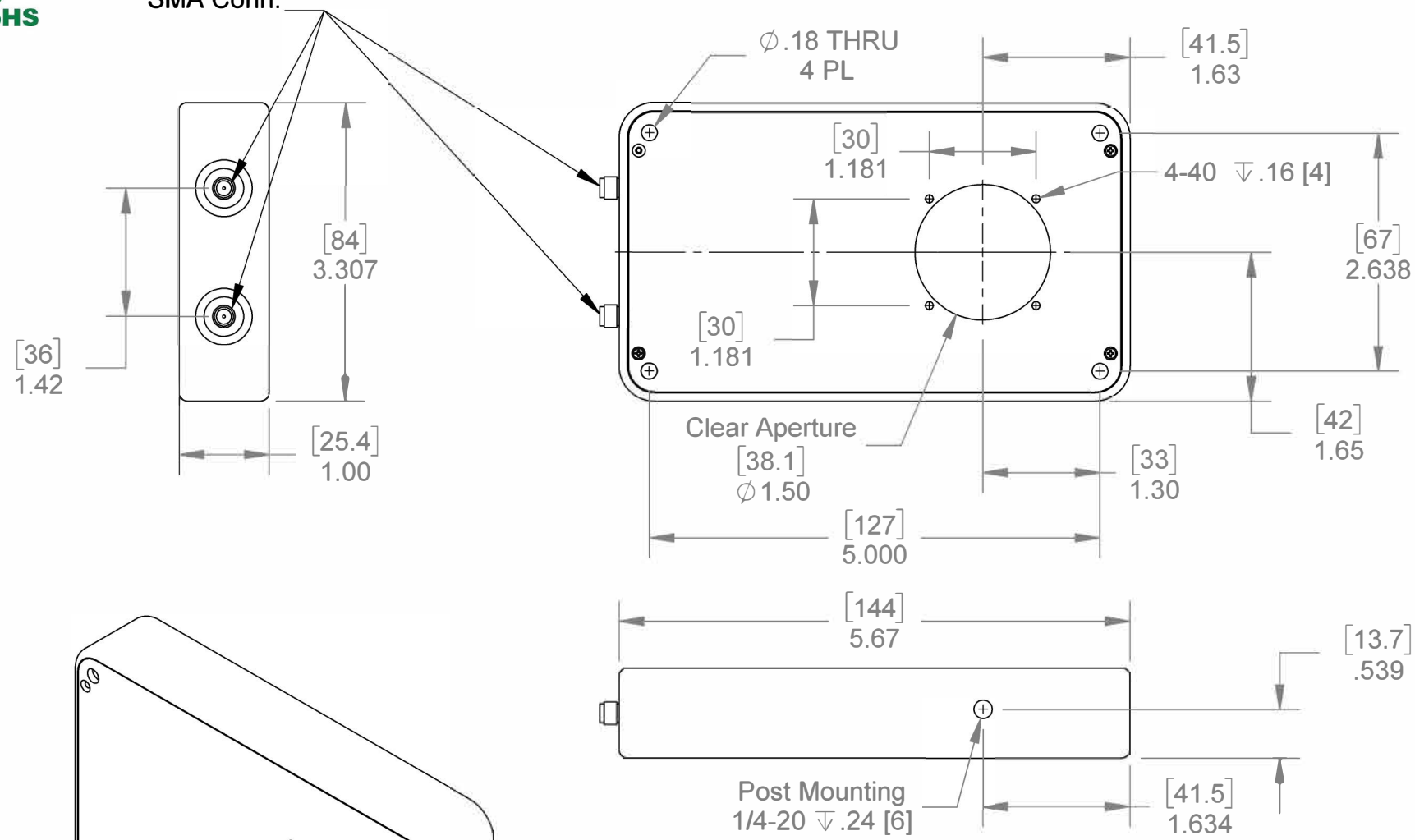

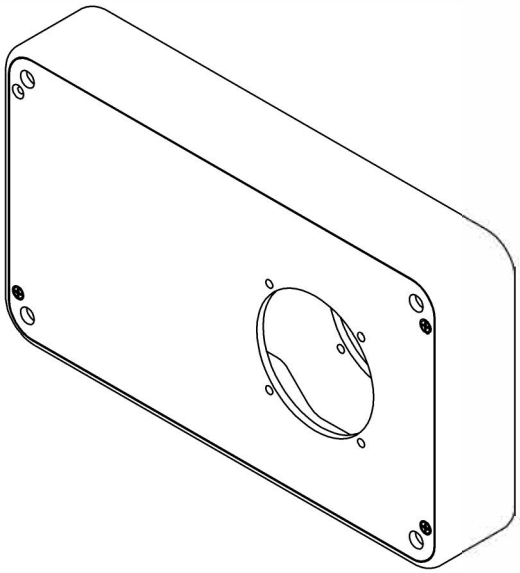

UNSPECIFIED LIMITS
DIMENSIONS IN INCHES

FRACTIONS	± 1/32	STRAIGHTNESS &/OR FLATNESS: .005/INCH	
DECIMALS	.XX ± .010 .XXX ± .005	THREADS: EXTERNAL - CLASS 2A INTERNAL - CLASS 2B	
HOLE DIA's	.XX ± .005 .XXX +.003 -.001	UNMARKED ANGLES, BENDS & INTERSECTIONS: 90°	
ANGLES	± 0° 30'	MACHINED SURFACES: 63 OR BETTER	
BENDS	± 2°	REMOVE ALL BURRS & SHARP CORNERS	
PERPENDICULARITY	.003/INCH		
CONCENTRICITY	.003 TIR		

SAMPLES MUST BE APPROVED BY ENGINEERING DEPARTMENT PRIOR TO STARTING PRODUCTION

THIS DRAWING IS THE PROPERTY OF HINDS INSTRUMENTS INC. ALL RIGHTS RESERVED.

DO NOT SCALE DRAWING

DATE PRINTED

APPROVALS	DATE
DRAWN cmansfield	8/6/18
CHECKED	

MATERIAL

FINISH

HINDS INSTRUMENTS
Hinds Instruments, Inc.
7245 NE Evergreen Pkwy
Hillsboro, OR 97124
PHONE (503) 690-2000 FAX (503) 690-3000

Head Assembly- 42, 47, 50UC - Overall Dimensions

SIZE	FSCM NO.	DRAWING NO.	REV.
A		08062018-OD	0
SCALE 1:1.75		RELEASE DATE:	SHEET 1 OF 1